Please Approve this Drawing	
Date	
Signature	

REVISIONS			
NO	DESCRIPTION	ECN NO	DATE
	INITIAL RELEASE	ECN-2201501030	2015.01.23

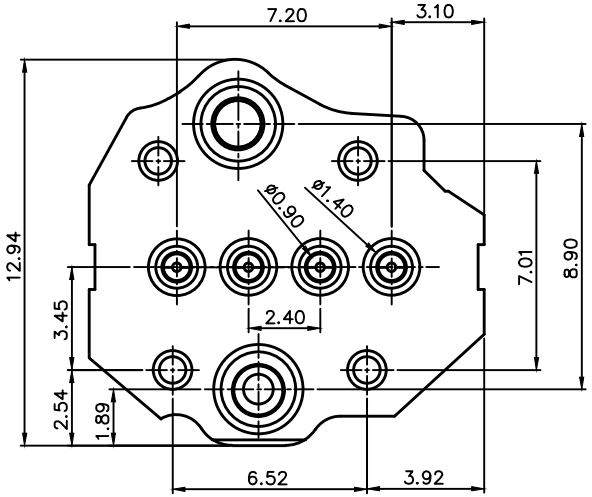

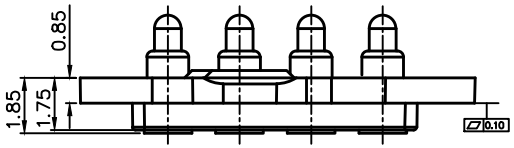

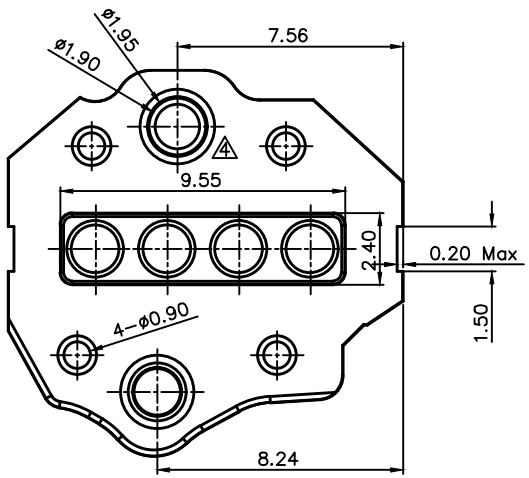

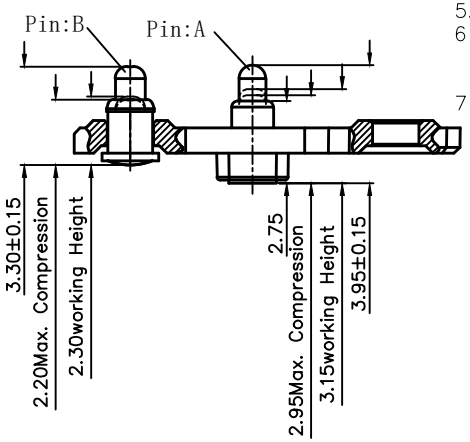

NOTES:

1. Materials:
   .Housing : White Sabic PC+20%GF(HFD4472-WH8G897)
   .Plunger&Barrel: Brass C3604
   .Spring: SWP/SUS304
2. Plating:
   .PlungerA :5 micro-inch minimum Au over 40 micro-inch minimum CuSnZn
   .BarrelA :50 micro-inch minimum Au over 40 micro-inch minimum CuSnZn
   .PlungerB&BarrelB :5 micro-inch minimum Au over 40 micro-inch minimum CuSnZn
3. Electrical
   .Pin A Rated Current & Voltage : DC 12 V ; 1.5A
   .Pin B Rated Current & Voltage : DC 12 V ; 1A
   .Contact Resistance: 50 mohm maximum at Working Height(Quiescence)
4. Mechanical
   .Spring Force Pin A :85±20%g at Working Height
   .Spring Force Pin B :70±20%g at Working Height
   .Durability: 10,000 cycles(minimum)
5. To avoid arcing issue, The adaptor start to power supply after connector mated fully
6 .To ensure the best usage, please operate it based on the working Height.
   .Based on the Engineering Drawings, shall not exceed the maximum allowed compression.
7 .Harmful material control please follow DOC. NO."DQ03050"

DRAWN	linyushou	SCALE:	5 : 1	UNIT	mm	DRAWING NO.	P2653MF01-04A240HR
CHECKED		SHEET:	1 of 1	PROJECT		TITLE:	Pogo Pin Connector
APPROVED		DATE:	2015.01.23	VER.	A.0		

THE UNMARKED TOLERANCE ARE AS BELOW :

LENGTH		ANGLE	
0~6.0	±0.05mm	0.	±2.0°
>6~30	±0.10mm	0.0	±1.0°
>30~120	±0.15mm	0.00	±0.50°

C.C.P. (DG) CONTACT PROBES CO.,LTD.
东莞中探探针有限公司

The information in this document is property of C.C.P company and should not be copied or reproduced in any other way, without written permission.