REVISIONS(修正)			
NO.(序号)	DESCRIPTION(描述)	ECN NO.(变更号)	DATE(日期)
	INITIAL RELEASE	ECN-07032602	03.26.07"
1	Modify H01C000-Q3 To H01C000-Q3P	ECN-07090303	09.03.07"
2	增加600set	ECN-07090303	09.03.07"
3	Change CAP H01A000-C0 TO H01B000-I0	ECN-120120427004	2012.04.27

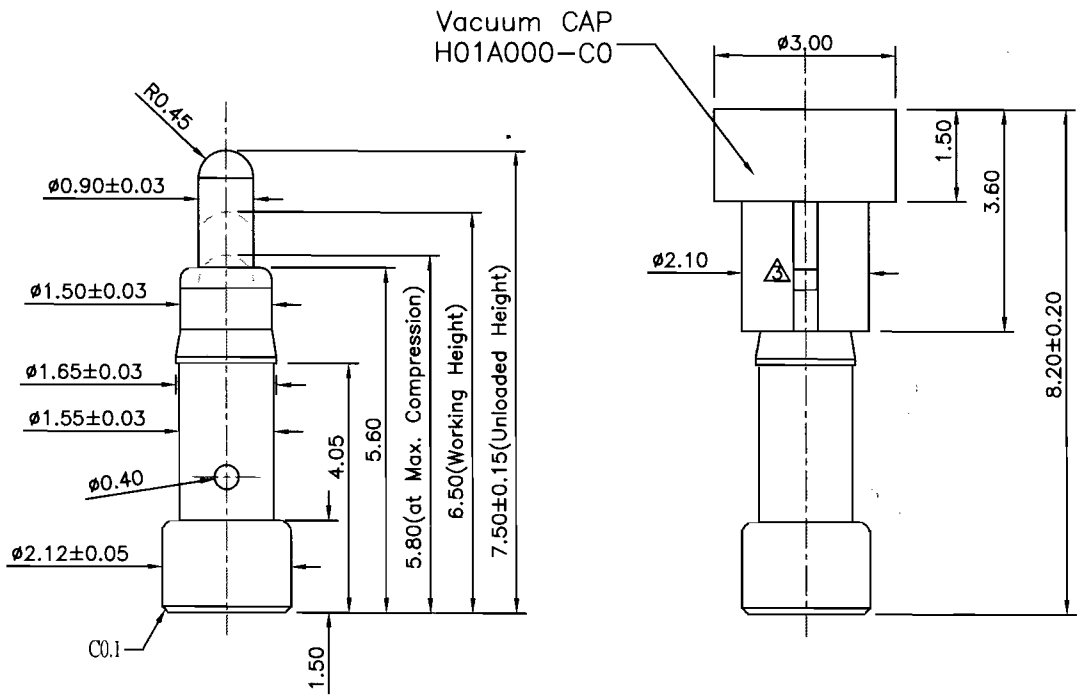

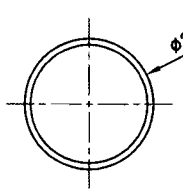

東莞中探探針有限公司
研發單位

2012-05-10

圖面請妥善保管
版權所有翻印必究

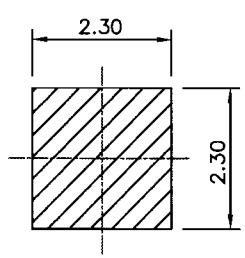

RECOMMEND PCB LAYOUT

NOTES(备注):

1. Materials(材质):
   .Cap(吸塑盖) : Black HTN+30% GF(UL94V-0)
   .Plunger(针轴): Brass C3604 (黄铜C3604)
   .Barrel(内管): Brass C3604 (黄铜C3604)
   .Spring(弹簧): SUS304
2. Plating(电镀):
   .Contact Surface(接触面) :10 micro-inch minimum Au over 50~100 micro-inch Ni.
   (镀镍50-100 micro-inch 后最少镀金10 micro-inch)
3. Electrical(电气特性)
   .Rated Current & Voltage: DC 12 V ; 1A
   (电压&电流:直流电12伏 ; 1安)
   .Contact Resistance:50 mohm maximum at Working Height(Quiescence)
   (接触阻抗:在工作高度时最大阻抗50毫欧(静态))
4. Mechanical(机械特性)
   .Unloaded Height (自由高度): 7.50mm
   .Working Height (工作高度) : 6.50mm
   .Spring Force :110g±20% at working height
   (弹力: 在工作高度的弹力110g±20%)
   .Durability:10,000 cycles(minimum)
   (寿命:10,000次(最少))
5. .To ensure the best usage, please operate it based on the working Height.
   (为了确保产品最佳性能，请在工作高度范围内使用)
   .Based on the Engineering Drawings, shall not exceed the maximum allowed compression.
   (根据工程图纸，不得超过允许的最大压缩行程使用)
6. .RoHs and HF compliant product. (符合RoHS和HF标准的产品)

PART(零件)	P/N(料号)	
Pogo Pin (Pogo Pin针)	H096M0	Plunger(针轴): N124P0-A15 Barrel(内管): H096R0-A15 Spring(弹簧): N124S1
Housing(塑胶)	W/O	
Vacuum CAP(吸塑盖)	H01B000-I0 3	
Carrier(载带)	H01C000-Q3P 1	
Reel(卷盘)	H096M0-H01C000CR(600set) 2	

DRAWN (设计)	康勇先	SCALE (比例)	2.5: 1	UNIT (单位)	mm	DRAWING NO. (图号)	H096M0-H01C000C
CHECKED (确认)		SHEET (页数)	1 of 1	PROJECT (视图)		TITLE (品名)	1-Pos Pogo Pin Connector
APPROVED (核准)		DATE (日期)	2012.04.27	VER. (版本)	A.2		

THE UNMARKED TOLERANCE ARE AS BELOW :
(未标记的公差)

LENGTH (尺寸)		ANGLE (角度)	
0~6.0	±0.05mm	0.	±2.0°
>6~30	±0.10mm	0.0	±1.0°
>30~120	±0.15mm	0.00	±0.50°

C.C.P. (DG) CONTACT PROBES CO.,LTD.
东莞中探探针有限公司

The information in this document is property of C.C.P company and should not be copied or reproduced in any other way, without written permission.