Please Approve this Drawing	
Date	
Signature	

REVISIONS (修正)			
NO.(序号)	DESCRIPTION(描述)	DCN NO.(变更号)	DATE(日期)
D.0	NEW RELEASE	DCN-	2020.12.18

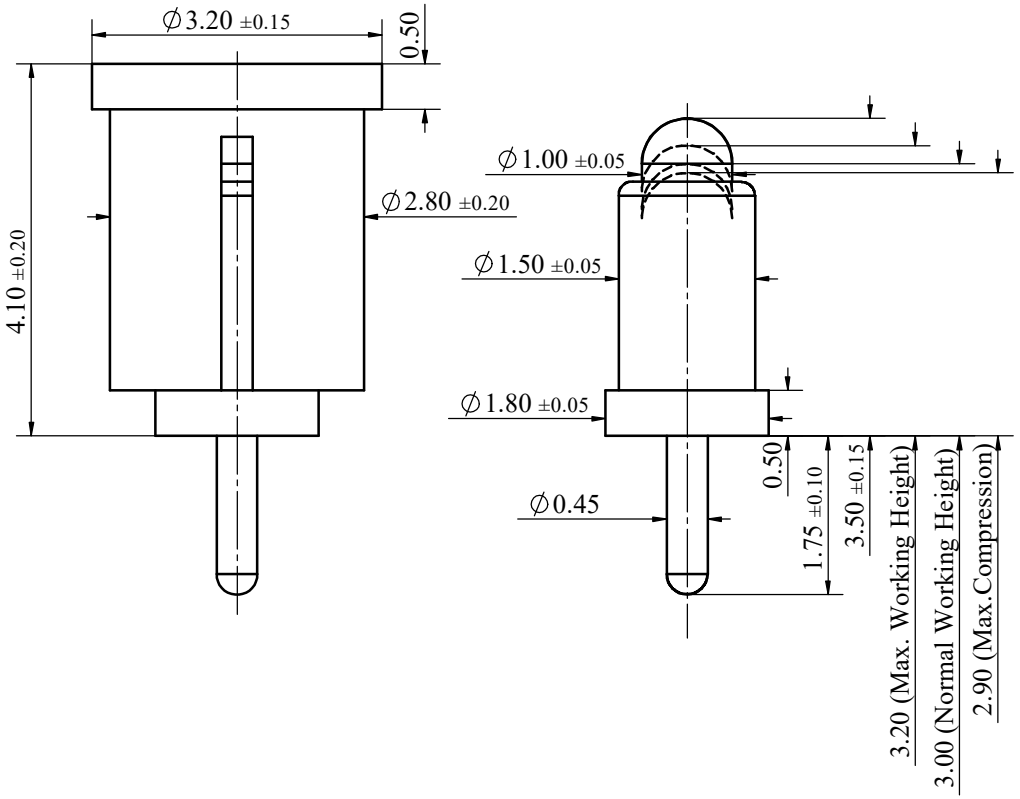

NOTES:

1.Material

Cap: High Temperature Polyester (UL94V-0), Black
Plunger: Lead-free Copper
Barrel: Lead-free Copper
Spring: SUS

2.Plating

Plunger: 20 micro-inch minimum Au over 50~120 micro-inch nickel
Barrel : 10 micro-inch minimum Au over 50~120 micro-inch nickel

3.Electrical

Rated current & voltage: DC12V; 2A.
Contact resistance: 50 mohm maximum at working height (quiescence)

4.Mechanical

Spring force: 60g±15g at Normal working height
Durability: 10,000 cycles (minimum)

5.Please operate the product at its indicated normal working height, to ensure a proper function of the product. To avoid damaging the product, do not exceed the maximum compression.

6.RoHS & HF compliant product.

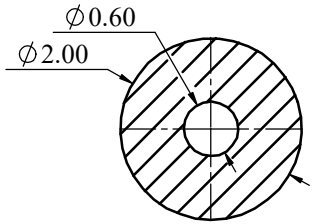

RECOMMEND PCB LAYOUT(TOP VIEW)

Layout Tolerance: ± 0.05mm

DRAW (设计)	龙飞常	SCALE (比例)	12:1	UNIT (单位)	mm	DRAWING NO. (图号)	P08862MP1-01A000CR
COUNTER SIGN (会签)	N/A	SHEET (页数)	1 of 1	VIEW (视图)		MATERIAL (材质)	N/A
AUDIT (审核)	肖大庭	DATE (日期)	2020.12.18	VERSION (版次)	D.0	TITLE (品名)	Pogo Pin Conn.
APPROVE (核准)	–	PLATING (镀层)	See Notes (见备注)				

NOT INDICATED TOLERANCES ARE AS BELOW :
(未标记的公差)

LENGTH (尺寸)		ANGLE (角度)	
0~6.0	±0.05mm	0.	±2.0°
>6~30	±0.10mm	0.0	±1.0°
>30~120	±0.15mm	0.00	±0.50°

C.C.P. (DG) CONTACT PROBES CO.,LTD.
东莞中探探针有限公司

The information in this document is property of C.C.P company and should not be copied or reproduced in any other way, without written permission.